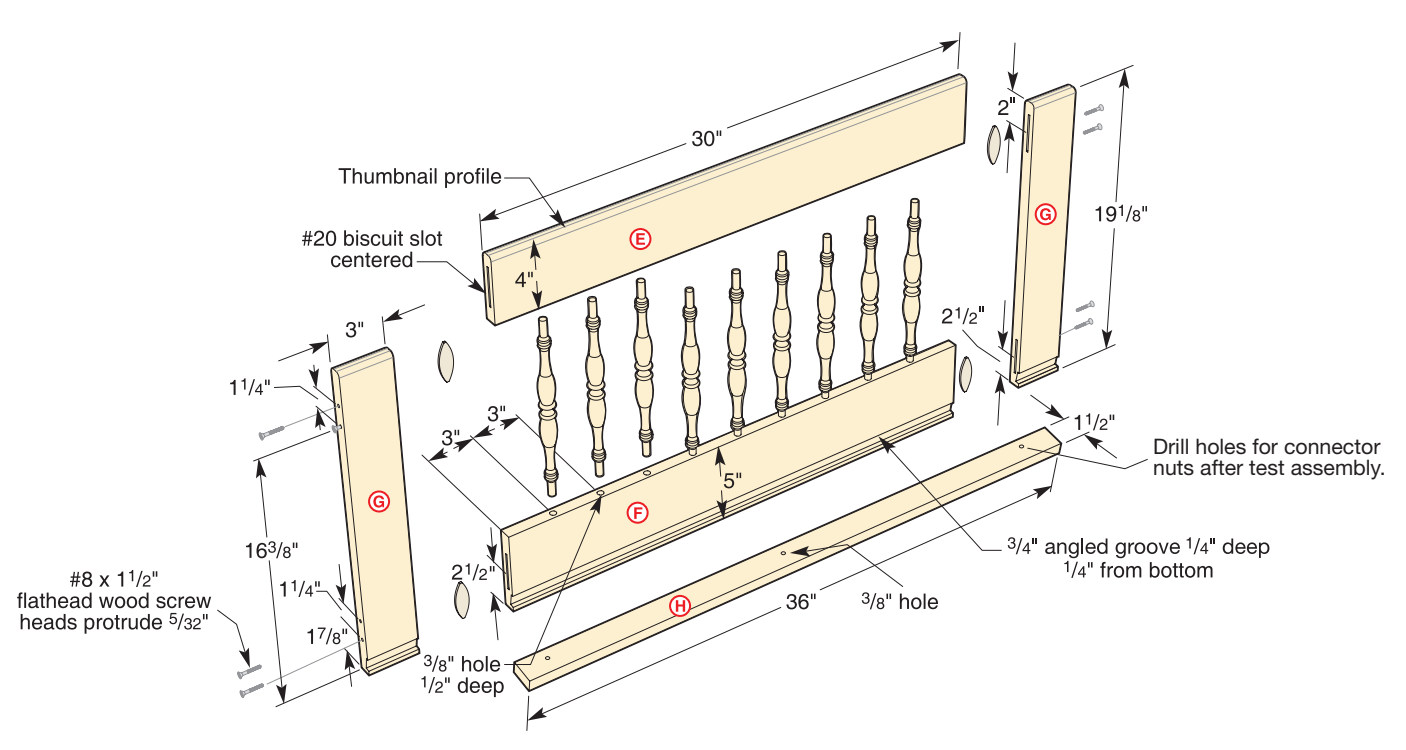
30"
Thumbnail profile
#20 biscuit slot centered
4"
E
2"
G
19 1/8"
2 1/2"
3"
1 1/4"
3"
3"
5"
F
1 1/2"
Drill holes for connector nuts after test assembly.
G
16 3/8"
2 1/2"
3/4" angled groove 1/4" deep 1/4" from bottom
#8 x 1 1/2" flathead wood screw heads protrude 5/32"
1 1/4"
1 7/8"
H
36"
3/8" hole
3/8" hole 1/2" deep